SPECIFICATIONS
Current Rating:1.0 Amps
Insulator Resistance:1000 Megohms Min.
Withstanding Voltage:300V AC/minute
Temperature Range: −40~+105°
Contact material:Brass
Finish: Gold or Tin plated
Insulator Material:PA6T
Soldering Temperature:+260°C,5S~8S max

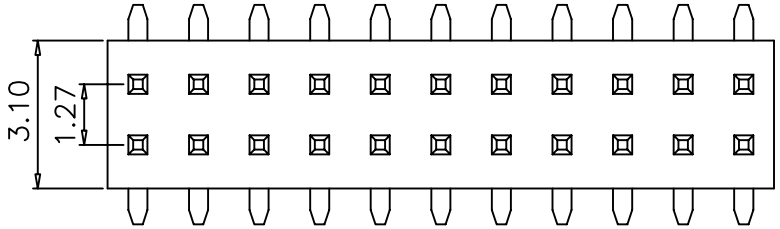

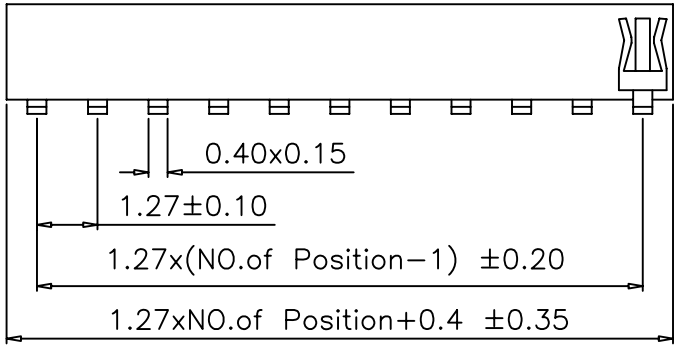

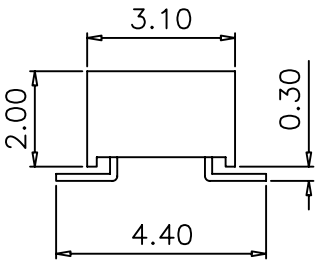

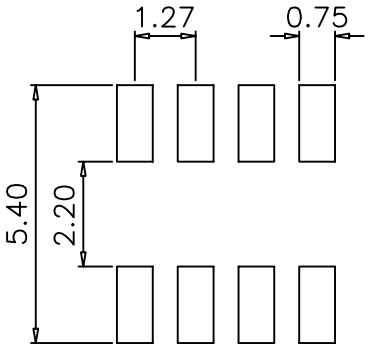

P.C.B LAYOUT

REV	DATE	MODIFICATION DESCRIPTION	CHANGE	APPROVE
0	05/12/27	NEW	———	———

OPERATION	
~ 10	±0.15
20 ~ 30	±0.30
30 ~	±0.50
Angle	± 2°
DIM	TOL

DRAW	ROSE.W	2001.03.06
DESIGN		
CHECK	MICKY	2001.03.06
APPROVE	HELLEN	2001.03.06

SCALE	
UNIT	mm
SIZE	A4
SHEET	1/1
PROJ.	

SCONDAR 森康达电子有限公司
SCONDAR ELECTRONIC LIMITED

PART NO.	FH127H200−SMT−2xXXP
TITLE:	1.27mm Female Header Double Row Straight SMT Type